SMC2030W-H

2MP 1080P HD Wi-Fi Security Camera with Audio

IP Network Camera Features

- Brilliant detail and high-performance Ambarella technology
- 4 Motion Detection zones with low-latency notifications
- 1080P HD (1920×1080) H.264 stream Cloud Recording
- Wi-Fi support
- Easy Setup and Schedule recording
- Secure Watch Smartphone APP and PC Viewer (Android and iOS)
- Two-Way Talk Audio features
- Night Vision- Max. IR LEDs Length 10m
- SD Memory Card Slot (Micro SD Max 64GB)
- 120° Wide Angle Lens
- DC5V (micro USB port)

Please visit www.na.smc.com

SMC2030W-H

Technical Specifications

Camera		
Image Sensor		1/3”2MegapixelCMOS
Effective Pixels		1920(H)x1080(V)
Scanning System		Progressive
Electronic Shutter Speed		Auto
Min. Illumination		Auto
S/N Ratio		More than 50dB
Video Output		N/A
Camera Features		
Max. IR LEDs Length		10m (33ft)
Day/Night		Auto(ICR)/Color/B/W
Backlight Compensation		BLC / HLC / DWDR
White Balance		Auto
Gain Control		Auto
Noise Reduction		3D
Digital Zoom		16x
Lens		
Focal Length		2.0mm
Max Aperture		F2.0
Focus Control		Manual
Angle of View		117°/70°/136°
Lens Type		Fixed lens
Mount Type		Board-in Type
Video		
Compression		H.264
Resolution		2MP-1080P(1920×1080)/720P(1280×720)
Frame Rate	Main Stream	1080P/720P (30fps)
	Sub Stream	N/A
Bit Rate		H.264: 100Kbps ~ 1200Kbps
Audio		
Compression		AAC
Interface		Built-in Mic/Speaker
Network		
Ethernet		N/A
Wi-Fi		Wi-Fi(IEEE802.11b/g/n) 50m (open field)
Protocol		N/A
Max. User Access		Unlimited (Through Secure Watch)

SMC2030W-H

Smart Phone	iPhone, iPad, Android, (Cloud Recording up to 2MP)
Auxiliary Interface	
SD Memory Card Slot	Micro SD Max 64GB
USB	Micro USB
Audio	N/A
General	
Power Supply	DC5V
Power Consumption	<3W
Working Environment	-10°C ~ +45°C (14°F ~ +113°F) / Less than 95% RH
Ingress Protection	N/A
Vandal Resistance	N/A
Dimensions	64.4mm*55.7mm*107mm(2.54'' x2.19''x4.21'')
Weight	0.135Kg(0.30lb)

Dimensions (mm)

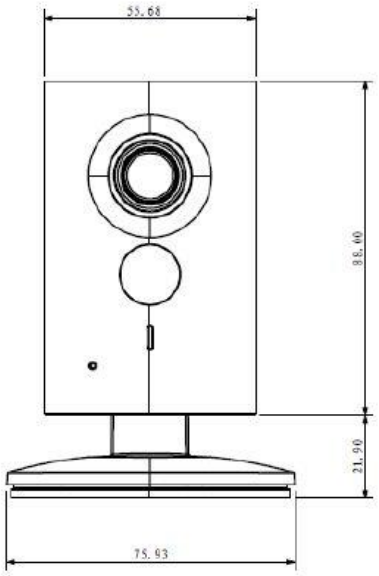

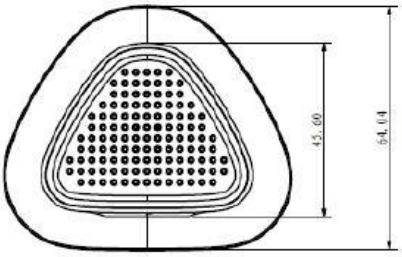

SMC Networks, Inc.
20 Mason Irvine CA 92618
Tel: 949-697-8000
Please visit www.na.smc.com

*Design and specifications are subject to change without notice.

© 2017 SMC Networks, Inc.